REVISION HISTORY			
REV	DESCRIPTION	DATE	APPROVED

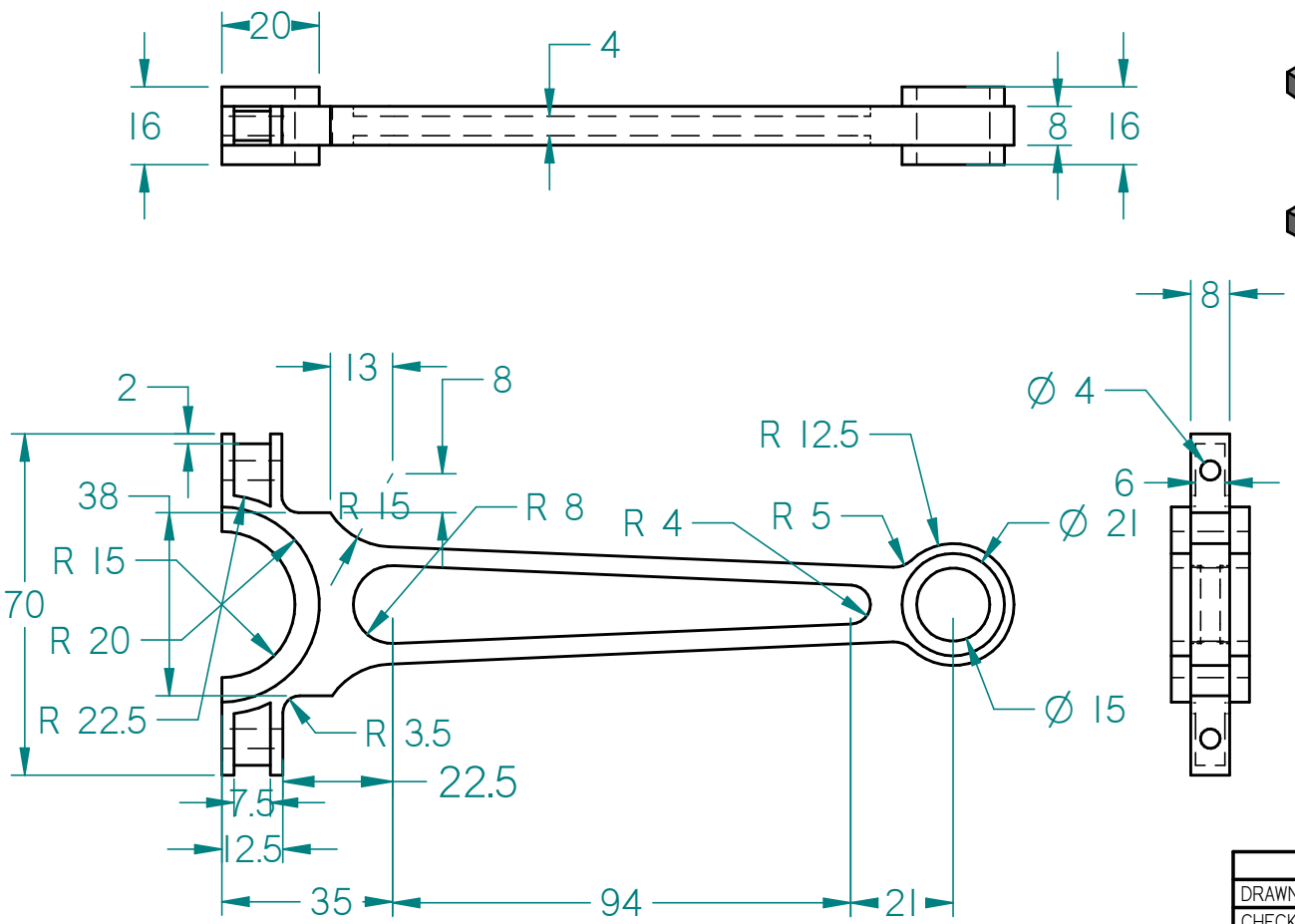

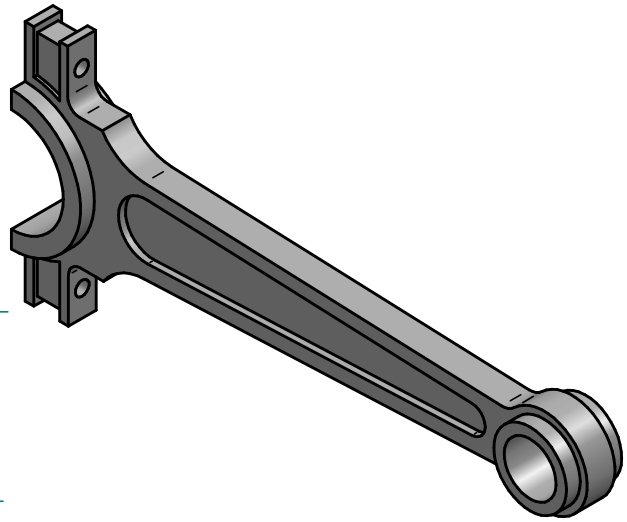

	NAME	DATE
DRAWN	aamu	06/05/20
CHECKED		
ENG APPR		
MGR APPR		

UNLESS OTHERWISE SPECIFIED
DIMENSIONS ARE IN INCHES
ANGLES ±X.X°
2 PL ±X.XX 3 PL ±X.XXX

Solid Edge

TITLE
LAB 13 - Seif

SIZE B | DWG NO | REV

FILE NAME: Lab4-Seif v2.dft

SCALE: | WEIGHT: | SHEET 1 OF 1

SOLID EDGE ACADEMIC COPY